MOSTEC AG
Elektronische Mess- und Regelsysteme
Lausenerstrasse 13A
CH-4410 Liestal, Switzerland

T: +41 61 921 40 90
F: +41 61 921 40 83
www.mostec.ch
info@mostec.ch

MOSTEC
Swiss Electronics

Conductivity Meter Type M2436

Front view

Available cells

Functions

- 2 current outputs
- 2 limit contacts
- Externally configurable
- Programmable
- Temperature compensation

Technical description

The M2436 conductivity meter is mounted in +/- 180° turnable, water resistant, polypropylen case. Any commercially available conductivity cells, K-factor 0.01, 0.1, 1.0 and 10.0, which cover a dynamic range from 0.01µS to 20mS full scale can be used. The cell is simply assembled to the desired measuring unit and directly attached to the M2436.

The conductivity meter is suitable for water, waste water or ultrapure water conditioning in continuous or batch-type operating modes, for liquid chromatography or for general chemical process monitoring.

Temperature coefficient of the cell is compensated either manually or automatically by a Pt-100 platinum probe within the range of 0°C to 130°C.

The 8x2 LCD character display shows the currently measured conductivity and the process temperature.

These values are available at two galvanic isolated outputs of 0...20mA or 4...20mA.

The M2436 is powered by either 24VAC or DC.

Optionally, all measuring ranges are externally selectable with digital control wires during the measurement process. Two isolated, free limit contacts are also optionally available to control valves or other control elements.

Supply lines and all other lines, either from or to the conductivity meter, are protected by internal noise filters against HF-noise. A cable of either 2m or 5m is used to connect the M2436si signals and power supply.

Technical Data:

Measuring ranges:	0...2.000µS (K=0.1, K=0.01) 0...20.00µS (K=1.0, K=0.1, K=0.01) 0...200.0µS (K=1.0, K=0.1) 0...2.000mS (K=1.0) 0...20.00mS (K=1.0, K=10.0) 0...200mS (K=10.0)
Display:	8x2 character LCD display with grey characters and a yellow back light Viewing area: 36.0mm x16.00mm, character size: 2.945mm x 5.545mm
Working temperature range:	-5 to +45°C
Accuracy:	0.5%
Reproducibility:	<0.2%
Measuring amplitude:	70/150mV, conductive cell only
Step response:	Time between a conductivity change from 0% to 100% or reverse measured between 10% and 90% = 4 seconds
Input protection:	virtual zero, protected by diodes
Temperature compensation:	manual form 0 to 130ºC, automatic by an external Pt-100 platinum sensor, 2 or 3-wire
Temperature slope:	0.00%/ºC (=without compensation) to 8.00%/ºC. Selectable in all measuring ranges
Conductivity of water:	The self conductivity of ultrapure water is measured and temperature compensated
Reference temperature:	25°C
Cell connection:	The cell is directly assembled to the M2436 over a temperature restraining, +/-180° turnable polyamide tube.
Option current output: Max. load: Output impedance:	2 x 0/4...20mA, galvanically isolated 500Ω >1MΩ typical
Device settings: options:	with push buttons, see operating manual measuring ranges, cells K-factor, temperature slope, current outputs
Power supply:	24VAC/DC
Power supply load:	1.5 to 2.5W at 24VDC
CE-conformity:	fulfilled
Connection cable:	PVC cable length: 2m, 5m or other sizes on request
Thread:	3/4" cylindrical gas, with O-ring, adapters on request
Case:	splash water proof, in polypropylen
Weight:	320g
Warranty:	2 years
Compatible cells:	type M8836s, M8836S10, M8836s01, M9836C1, others on request
Options:	- customer specified functions - customer specified cells - other power supply - other output signal - 2 limit contacts - externally configurable measuring range

Terminal description standard version (without limit contacts and externally configurable measurement range):

PVC cable: 5-wires	current output (GND)	(brown)
	conductivity current output (+)	(yellow)
	temperature current output (+)	(green)
	supply voltage: AC~/DC(-)	(black)
	supply voltage: AC~/DC(+)	(red)

Terminal description for version with 2 limit contacts and externally configurable measurement range:

PVC cable: 15-wires	current output (GND)	(brown)	limit contact 2 n.o.	(blue)
	conductivity current output (+)	(yellow)	limit contact 2 c.o.	(viollet)
	temperature current output (+)	(green)	limit contact 1 n.c.	(gray-pink)
c.o. = change over	supply voltage: AC~/DC(-)	(black)	range configuration (GND)	(red-blue)
n.o. = normally open	supply voltage: AC~/DC(+)	(red)	range configuration (+24V)	(white-green)
n.c. = normally closed	limit contact 1 n.o.	(white)	range configuration (+24V)	(brown-green)
	limit contact 1 c.o.	(gray)	range configuration (+24V)	(white-yellow)
	limit contact 1 n.c.	(pink)		

Setting the range by external control wires:

red-blue	white-green	brown-green	white-yellow	range capacitive	range inductive
GND	0V	0V	0V	internal	internal
GND	+24V	+24V	+24V	2µS	2mS
GND	0V	+24V	+24V	20µS	20mS
GND	+24V	0V	+24V	200µS	200mS
GND	0V	0V	+24V	2mS	2S
GND	+24V	+24V	0V	20mS	---
GND	0V	+24V	0V	200mS	---

Dimensions (mm):

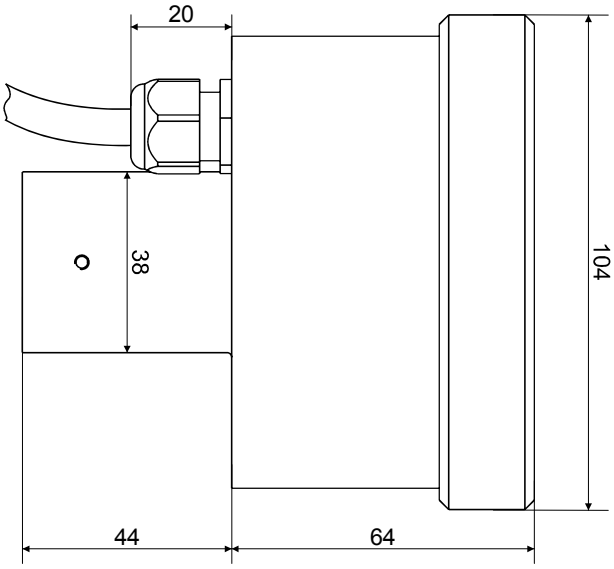

Side view

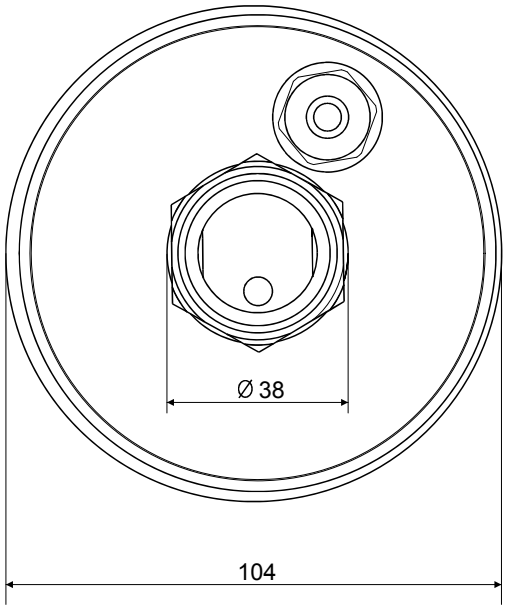

Bottom view

Wiring:

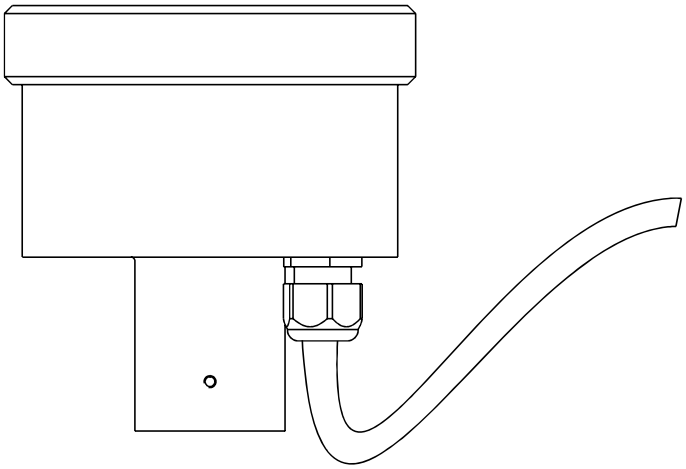

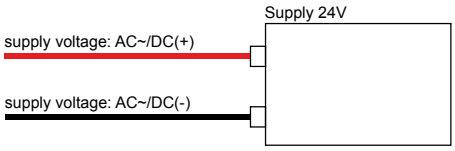

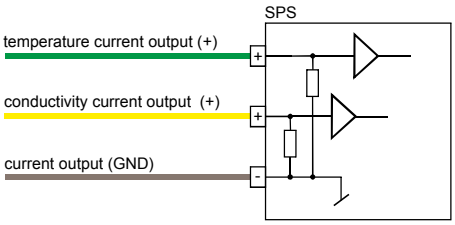

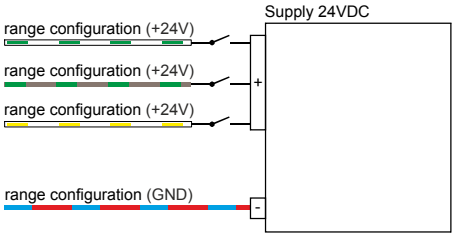

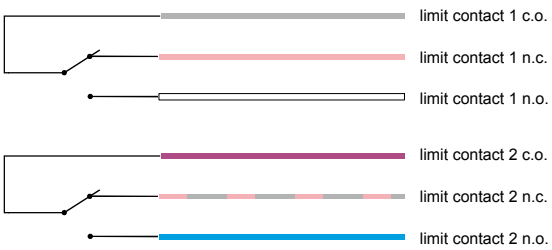

MOSTEC

V1.10